ISSN (Print) : 2337-9030 ISSN (Online) : 2685-2608
PILLAR OF PHYSICS
JURNAL BERKALA ILMIAH FISIKA
Vol. 19 (2), 2026, page. 98-106
DOI : https://doi.org/10.24036/dd4x2409

AN ELECTRIC KOLINTANG BASED ON ARDUINO

Ellis Fahma[1], Yohandri[1*], Asrizal[1], Irdhan Epria Darma Putra[2]

[1] *Department of Physics, Universitas Negeri Padang, Jl. Prof. Dr. Hamka Air Tawar Padang 25131, Indonesia*
[2] *Department of Drama Dance and Music, Universitas Negeri Padang, Jl. Prof. Dr. Hamka Air Tawar Padang 25131, Indonesia*

Corresponding author. Email: yohandri@fmipa.unp.ac.id

ABSTRACT

Kolintang is a traditional musical instrument from North Sulawesi made of wood. It requires a wooden frame as a base, which makes it difficult to carry and store in narrow spaces. Kolintang game applications are still limited to playing the instrument virtually via Android. The Electric Kolintang is easier to carry than the original kolintang. Electric Kolintang provides innovation for traditional kolintang, One kolintang can be used for two different musical instruments, namely melodic kolintang and bass kolintang. Unlike the original kolintang, which needs two physical instruments, players can play alternately using only one electric kolintang. The Electric Kolintang detects blows via a push button located under the kolintang stem. This study aims to explain the performance specifications that characterize the instrument's performance and the design specifications that determine characterize the accuracy and precision of the sound produced by an Arduino-based electric kolintang. The measurement techniques used are direct and indirect measurements. Direct measurements are carried out by comparing the original cross-sectional frequency data with the electric current. Indirect measurements are carried out to analyze the accuracy and precision of the electric kolintang. The accuracy percentage is 98.72%, the accuracy percentage for the kolintang melody is 99.92%, and the kolintang bass is 100%, while the practicality result is 81%

Keywords : *Electric Kolintang; Pushbutton; Arduino.*

Pillar of Physics is licensed under a Creative Commons Attribution ShareAlike 4.0 International License.

I. INTRODUCTION

Kolintang musical instrument at the beginning of its development in the Minahasa area, North Sulawesi.[1] At this time, Kolintang has spread to various other areas outside Sulawesi and is also well known to foreign countries [2]. Kolintang is played by the Minahasa community from ancient times until today [3]. Kolintang is an idiophone musical instrument that is composed of wood, which when hit with a stick can produce sounds, namely Tong on low notes, Ting on high notes, and Tang on middle notes. The sound of Tong Ting Tang is the origin of the word kolintang [4]. Kolintang is an ensemble musical instrument that has several instruments, namely melody, alto, tenor, cello, and bass. The difference between each kolintang instrument can be seen in the sound it produces. The melodic kolintang is used to determine the song, the alto kolintang is the accompaniment of the high notes, the tenor kolintang is the low tone accompaniment, the cello kolintang is the rhythm determiner and the bass kolintang is the low notes. kolintang has limitations, namely, one kolintang can be used for one instrument only. Each kolintang instrument has a different tone. Kolintang has a diatonic scale as in the western conventional, complete with chromatic [5]. The tone system in kolintang is a chromatic scale, where the number notation reflects the notes on the chromatic scale. The tone system used must meet the existing scale interval arrangement [6]. Therefore, to play kolintang with several instruments must use several kolintang as well. The limitations of the kolintang have led to innovations to make one kolintang can be configured into 2 different instruments so that players who are just learning can play all five instruments in turn. Other innovations made to the kolintang musical instrument include being lighter, less space-consuming, and economical. Furthermore, due to the declining interest among the younger generation and song arrangements that are often perceived as outdated, the electric kolintang was developed to enhance interest in this musical instrument [15]. The appearance of the Kolintang melody is shown in Figure 1.



Fig1. Kolintang Melodi

This electric kolintang innovation is designed using push buttons, Arduino Mega, DFPlayer Mini, memory card, LCD, and speaker. Title: Making Arduino-Based Electric Kolintang, With details Arduino Mega is a microcontroller development board based on Arduino using a chip that has quite a lot of I/O pins. The push button is an electronic component that functions as a connecting and disconnecting switch when pressed for a moment, the button will return to its original position [7]. The push button is used to catch a blow or pressure on the bar as shown in Figure 2.



Fig 2. *Pushbutton*

When the switch button is pressed, this normally open contact will close and conduct an electric current. While normally closed is a terminal contact where conditions are normally closed. When the switch button is pressed, the normally closed contacts become open, resulting in the loss of electricity. [8]. The interface used to display the instrument is a 16x2 LCD Display.

LCD is a type of electronic display that works by reflecting the surrounding light on the front line or transmitting backlit light [9]. LCD functions as a display of a result value such as, displaying characters, letters, numbers, or displaying menus on microcontroller applications [10]. The microcontroller is used to program the tool made. The microcontroller is an electronic component that can be programmed and can execute pre-programmed steps [11]. The microcontroller used is Arduino Mega 2560. Arduino Mega is shown in Figure 3.



Fig 3. Arduino Mega 2560

Arduino Mega has quite a lot of I/O pins, 54 digital I/O pins (15 of them are PWM, 16 analog input pins, and 4 UART (hardware serial port) pins). Arduino Mega 2560 is equipped with a 16 Mhz oscillator, a USB port, DC power jack, ICSP header, and reset button. This board is very complete, and already has everything needed for a microcontroller [12].To store sound recording files from kolintang stored on a memory card placed on DFPlayer Mini as an mp3 module. The mini DFPlayer is shown in Figure 4.

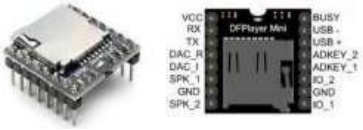

Fig. 4. DFPlayer Mini

DFPlayer mini can be used in a single stand using batteries, speakers, and pushbuttons can also be used on Arduino or with other devices that have receiver/transmitter capabilities[13]. The system output is a tone frequency in the form of the original kolintang tone frequency that will be issued to the speaker. Speakers are electronic devices made of metal and have membranes, coils, and magnets as complementary parts [14].

II. METHOD

The frequency data collection procedure includes investigating the problem, finding the problem of how one electric kolintang can be used by two instruments, namely the Melody and Bass. The design and implementation of the tool design uses a pushbutton pressed with a stick (beater) that is given a pad at the end. So that the sound between the beater and the blade does not interfere with the sound source, a fairly thick foam is used at the end of the beater to produce the same sound as the original kolintang condition. Design validation (tool design trial), measuring instrument used as a standard reference is the Kolintang musical instrument application. The recording of the kolintang sound begins by recording the kolintang sound from the kolintang application. The results of the kolintang recording will be analyzed using Audacity software. The determination of the electric kolintang instrument is obtained from the comparison of the reference frequency of the kolintang application with the electric kolintang. If the frequency produced on the electric kolintang is the same as the kolintang application, the tool is declared accurate. Evaluation of the tool is taken from distributing questionnaires to correspondents. The number of correspondents is 5 people who understand kolintang and who can play electric kolintang and original kolintang well. The type of research used is engineering research.. The stages in engineering research are shown in Figure 5.

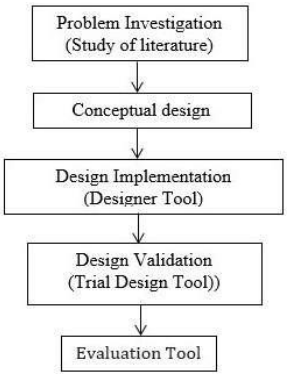

Fig 5.engineering research

The research data is taken from the influence of the presence or absence of pressure on the pushbutton. For frequency data obtained from reference kolintang voice recordings, the results will be analyzed by Audacity software. The results of the Audacity software analysis will be the frequency used by electric kolintang. Accuracy data is obtained from the comparison of the frequency of the reference cross and electric cross. While the accuracy data is obtained by pressing the pushbutton in the same state repeatedly.

The electric kolintang arrangement consists of a pushbutton, power supply, push button, DFplayer Mini, Arduino nano, LCD, and speakers. The arrangement of the electric kolintang system is shown in Figure 6.

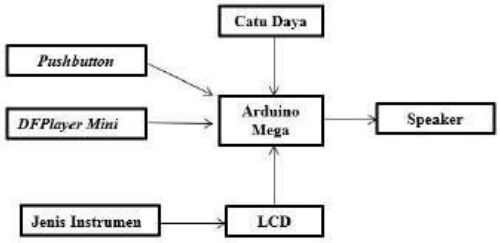

Fig 6. Electric Kolintang System Arrangement

Figure 6 explains that the Arduino mega will be active if it is given a 5V power supply. Push buttons and instruments displayed on the LCD will be input for Arduino to process the audio on the mini DFPlayer as an mp3 module. After the input is processed by the Arduino Mega system, the output will be output to the speaker.

III. RESULTS AND DISCUSSION

A. Performance Specifications

A device's performance specifications describe what the device is intended to do and how well the device or system is expected to operate under specific conditions. Testing and analysis are required to determine whether the system is functioning properly. The pushbutton sensor was characterized using an Arduino Mega to obtain real-time data. The characteristics of the pushbutton circuit are shown in Figure 7.

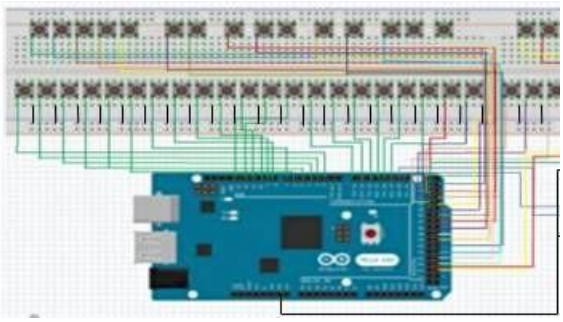

Fig 7. Characteristic Pushbutton Circuit

The pushbuttons used in this system have two pins: a positive pin (+5V), which serves as the voltage supply, and a negative pin (ground), which acts as the voltage reference. The positive pin is connected to the +5V supply, while the negative pin is connected to the ground of the microcontroller board.This system employs 42 pushbuttons, each functioning as a sensor to detect individual kolintang blades. When pressed, each button generates a logic signal that is read by the microcontroller as a digital input. This enables the system to identify which specific part is activated based on the detected input.The microcontroller used in this system is the Arduino Mega 2560, which is selected due to its large number of digital input/output pins, allowing it to accommodate all 42 pushbuttons simultaneously. In addition, the processing capabilities of the Arduino Mega enable real-time data acquisition, ensuring that the system can respond to button presses with minimal delay. The pushbutton circuit can be seen in Figure 8.

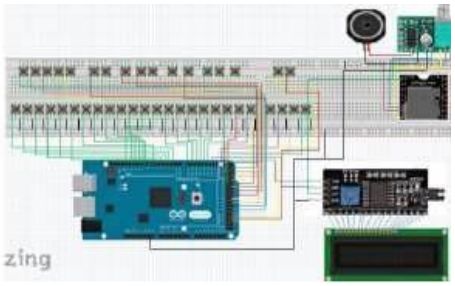

Fig 8. Pushbutton Circuit

In figure The LCD displays the selected instrument type, namely Melody or Bass. The instrument type can be changed by pressing a switch (pushbutton). The pushbuttons used in this system have two pins: a positive pin and a negative pin. The negative pin is indicated by a black wire connected to the ground pin of the Arduino Mega 2560, which serves as the voltage reference. Meanwhile, the positive pin is connected to a +5V supply to provide an input signal when the button is pressed. In this system, the pushbuttons function as substitutes for the kolintang bars, with each button representing a single bar. When a button is pressed, the circuit generates a logic high signal (HIGH or 1), whereas when it is not pressed, the system reads a logic low signal (LOW or 0). After characterizing each pushbutton, including evaluating its response and signal stability, the next step is to record the kolintang sounds as reference data. This recording process is carried out using Audacity, which enables the recording, processing, and storage of high-quality digital audio signals. The recorded audio data are then used to develop an electric kolintang system by mapping each button press to the corresponding kolintang bar sound. Furthermore, the DFPlayer Mini MP3 player module is utilized to play the audio associated with each note. The reference kolintang used in this process is shown in Figure 9.



Fig 9. Electric Kolintang Mechanics

In Figure 10, the mechanical electric crossbar is seen on the front. The electric Kolintang has a length of 53.5 cm with a diameter of 15 cm. On the electric kolintang 42 pushbuttons function as a substitute for the blades of the kolintang. On the front display, there is an instrument replacement button, on/off button, and volume control to increase and decrease the volume as well as on the side of the place to charge the electric kolintang. On the front display of the kolintang, there is an LCD at the top to display the name of the kolintang instrument being played.

B. Design Specification

The Design Specification starts from the pushbutton characterization data. Table 1 is the result of the characterization of the pushbutton stress change relationship when pressed or released.

Table 1. Voltage Change Relationship Data when pressed and released.

Experiment To-	Current voltage pushbutton pressed (volts)	Current voltage pushbutton released (volts)
1	0.07	5
2	0.07	5
3	0.07	5
4	0.07	5
5	0.07	5
6	0.07	5
7	0.07	5
8	0.07	5
9	0.07	5
10	0.07	5

In table 1 it can be seen that 10 experiments were carried out where the pushbutton was used as a pressure detector. When the pushbutton is pressed, the voltage value is 0.07 volts but when released the voltage changes to 5 volts. Kolintang tone frequency was obtained from the recording of kolintang sound and analyzed using Audacity Software. Figure 10 is the result of the analysis of the recorded sound of the C4 melody.

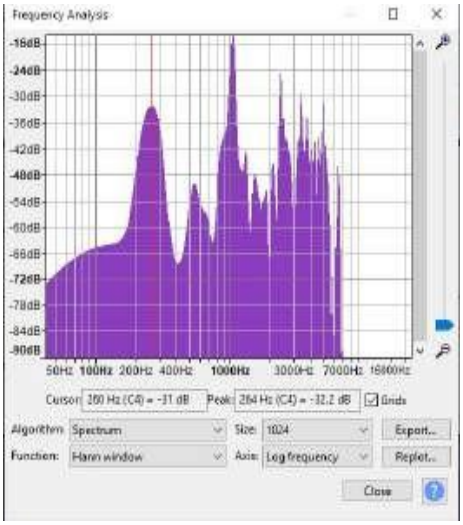

Fig 10. Results of C4 Analysis of Kolintang Melody Sound

In Figure 10 the frequencies that have been analyzed using Audacity software can be seen in the peak column. The peak shows the C4 tone in the analyzed kolintang sound. Then obtained 264 Hz for the sample tone C4 at kolintang. After the frequency analysis process is complete, accuracy data can be obtained from the comparison of the reference cross-link frequency with the electric cross-link. The frequency is taken on each note designed on the electric cross. Accuracy data is taken by pressing the button in the same position repeatedly 10 times the sound produced does not change and the resulting frequency is the same. After analyzing the pushbutton characterization data, the next thing to do is the comparison of the reference cross-link frequency with the electrical cross-link which is called accuracy. Table 2 is the correctness of the cross-sectional data on both instruments.

Table 2. Kolintang Accuracy Data on Both Instruments

Instrument	Tone	Original Kolintang Tone Frequency (Hz)	Electric Kolintang Tone Frequency(Hz)	Error (%)
	A0	27	28	3,70
	A#0	29	28	3,45
	B0	30	31	3,33
	C1	32	32	0,00
	C#1	34	35	2,94
Bass	D1	36	37	2,78
	D#1	38	39	2,63
	E1	41	40	2,44
	F1	43	43	0,00
	F#1	46	47	2,17
	G1	49	50	2,04
	G#1	53	54	1,89
	A1	55	55	0,00
	A#1	58	59	1,72
	B1	62	61	1,61
	C2	65	64	1,54
	C#2	70	70	0,00
	D2	74	73	1,35
Bass	D#2	78	77	1,28
	E2	82	81	1,22
	F2	88	88	0,00
	F#2	93	94	1,08
	G2	98	100	2,04
	G#2	103	105	1,94
	A2	111	112	0,90
	C3	132	135	2,27
	C#3	138	141	2,17
	D3	146	147	0,68
	D#3	159	162	1,89
	E3	164	166	1,22
	F3	177	180	1,69
	F#3	185	187	1,08
	G3	196	198	1,02
	G#3	208	210	0,96
	A3	221	225	1,81
	A#3	235	238	1,28
	B3	246	248	0,81
	C4	262	267	1,91
	C#4	278	281	1,08
	D4	294	296	0,68
	D#4	311	316	1,61
	E4	330	334	1,21
	F4	350	352	0,57

Melody	F#4	372	377	1,34
	G4	395	400	1,27
	G#4	425	428	0,71
	A4	445	442	0,67
	A#4	468	473	1,07
	B4	496	502	1,21
	C5	527	532	0,95
	C#5	558	562	0,72
	D5	592	595	0,51
	D#5	637	642	0,78
	E5	662	671	1,36
	F5	712	715	0,42
	F#5	745	753	1,07
	G5	791	793	0,25
	G#5	835	840	0,60
	A5	894	892	0,22
	A#5	932	937	0,54
	B5	995	997	0,20
	C6	1052	1055	0,29
	C#6	1112	1118	0,54
	D6	1191	1188	0,25
	D#6	1260	1271	0,87
	E6	1373	1377	0,29
	F6	1446	1440	0,41

Table 2 explains that the frequency generated at the electric crossbar is not much different from the frequency at the reference crossbar. Accuracy data on electric kolintang is if the button is pressed in the same position repeatedly 10 times the sound produced does not change and the resulting frequency is the same. Accuracy data collection is done by sampling two tones, namely bass and melody. Taking these two tones representing the tone of each instrument on the electric kolintang can be seen in Table 3.

Table 3. The Accuracy of Electric Kolintang Sound

Experiment To-	Frequency Cross Melody Tone B3(Hz)	Frequency Bass Tone B1(Hz)
1	248	61
2	248	60
3	250	60
4	248	61
5	248	60
6	248	62
7	249	62
8	247	62
9	248	61
10	248	61
Average	248,2	61

It can be seen in the frequency table that is generated after the electric current is pressed in the same position over and over again, almost the same. The last date is the practicality of the tool. Practical data were taken from distributing questionnaires to correspondents. The number of correspondents is set at 5 correspondents. Correspondents who fill out the questionnaire are people who understand the kolintang and can play the electric kolintang well. The results of the practicality of electrical kolintang data are described in Table 4.

Table 4. Practical Data Results

Num	Aspects	Result	Criterion
A.	Ease of Use	72	Practical
		80	Practical
		92	Very Practical
B.	Attraction	100	Very Practical
		84	Practical
C.	Efficiency	92	Very Practical
		64	Quite Practical
		64	Quite Practical
	Average	81	Practical

Based on the three aspects above contained in the practicality test, it can be concluded that the electric kolintang is practical for the three aspects, namely ease of use, attractiveness, and efficiency. Based on the analysis that has been done, both statistically provide research results that are by the research objectives.

The results obtained include performance specifications and Arduino-based pushbutton electrical design specifications. Performance specifications have been identified through the identification of the functions of the parts that make up the system. System design specifications are known from the results of measurements and data analysis. Electrical Kolintang consists of two parts, namely the electronic part and the mechanical part. Electronic parts include a pushbutton frame, LCD, and microcontroller circuit. The mechanical part consists of a modified wooden arrangement to resemble Kolintang.

The manufacture of electric kolintang begins with characterizing the pushbutton by making a pushbutton circuit and seeing the output voltage of the switch. The purpose of taking this data is to measure how sensitive the pushbutton switch is and how much voltage will be read on the Arduino-mega. From the research conducted, it was found that if the pushbutton is given pressure, the resulting voltage is constant. After the pushbutton voltage data is obtained, the frequency data is needed so that the electric crossover produces the same sound as the reference kolintang. the percentage of accuracy data obtained is 98.72%. the percentage of bass accuracy is 100% and the percentage of melody accuracy is 99.92%, while practicality results in 81%.

The advantage of the electric kolintang is that one kolintang can be played with two instruments. In addition, electric kolintang is more attractive and commercial.

IV. CONCLUSION

Based on the research results, it can be concluded that the performance specifications of the electric kolintang system consist of both mechanical and electronic systems. One electric kolintang unit integrates both melody and bass functions, making it easier to learn and more portable. This makes it more practical compared to the traditional kolintang, which is larger and more difficult to carry. Push buttons are used as pressure detectors to replace the blades of the kolintang. A series of push buttons functions as substitutes for each blade, supported by a power supply to operate the system, an LCD to display the type of electric kolintang instrument, and a speaker as the audio output. In terms of design specifications, the system achieved a data accuracy rate of 98.72%. The bass accuracy reached 100%, while the melody accuracy was 99.92%. Meanwhile, the practicality level was recorded at 81%.

REFERENCES

[1] Andriono, Timothy Norman. 2014. "*Multimedia Interaktif Alat Musik Kolintang*". Jurnal Ilmiah Mahasiswa Universitas Surabaya. 3(2): 1-11.

[2] Rumengan, Perry. Dkk. 2021. "*Transmutasi Satu Proses Lahirnya Genre Musik Baru : Studi Tentang Kelahiran Ansambel Musik Kolintang Kayu, Satu Genre Musik di Minahasa".* Jurnal Musik dan Pendidikan Musik, Vol. I No.2. Manado: Universitas Negeri Manado.

[3] Hendrik, Navaro. dkk. 2016. "*Pelestarian Musik Kolintang Di Desa Maumbi Kecamatan Kalawat*". Ejuornal Unsrat, Vol. 5 No.5. Manado: Universitas Sam Ratulangi.

[4] Mandiangan, Pridson. dkk. 2015. "*Prototip Musik Kolintang Dengan Teknologi Abakod Di Politeknik Negeri Sriwijaya*". Jurnal Seni Budaya, Vol. 25 No. 2. Palembang: Politeknik Negeri Sriwijaya.

[5] Kaseke, Petrus. 2013. Kolintang Petrus Kaseke: Buku Panduan Kolintang.

[6] Indariyana, Raditya, Wahyu. 2013. "*Strategi Pembelajaran Musik Kolintang bagi Manula (Lansia) di Desa Nyemoh Kecamatan Bringin Kabupaten Semarang*". Skripsi, Pendidikan Seni Drama Tari dan Musik, Fakultas Bahasa dan Seni, Universitas Negeri Semarang.

[7] Riski, Danindra Muhammad. 2019. "*Rancang Alat Lampu Otomatis di Cargo Compartment Pesawat Berbasis Arduino Menggunakan Pushbutton Switch Sebagai Pembelajaran di Politeknik Penerbangan Surabaya*". Jurnal SEMINAR NASIONAL INOVASI TEKNOLOGI PENERBANGAN ISSN : 2548-8090.

[8] Syaifuddin, Apri. 2008. "*Perancangan dan Pembuatan Otomatis Mesin Tube Cutting Berbasis Mikrokontroler*". Thesis. Universitas Internasional Batam.

[9] Sarmidi. dkk. 2019. "*Sistem Peringatan Dini Banjir Menggunakan Sensor Ultrasonik Berbasis Arduino Uno*". JUMANTAKA Vol 03 No 01 (2019). Tasikmalaya : STMIK DCI.

[10] Simbar, Ritha Sandra Veronika. 2017. "*Prototype Sistem Monitoring Temperatur Menggunakan Arduino Uno R3 dengan Komunikasi Wireless*". Jurnal Teknik Mesin, Vol. 05, Edisi Spesial 2016

[11] Yohandri. 2013. *Mikrokontroller dan Antar Muka*. Padang: Universitas Negeri Padang .

[12] Majid, Maulana. 2016. "*Implementasi Arduino Mega 2560 Untuk Kontrol Miniatur Elevator Barang Otomatis*". Skripsi, Teknik elektro, Fakultas Teknik, Universitas Negeri Semarang.

[13] Maulana, Luthfan. 2018. *"Rancang Bangun Alat Ukur Tinggi Dan Berat Badan Ideal Berdasarkan Brocha Berbasis Mikrokontroler".* JITCE, Vol.02 No.02. Padang : Andalas University.

[14] Suyanto. 2013. " *Multimedia alat untuk meningkatkan Keunggulan Bersaing*". Jakarta: PT. Elex Media Komputindo.

[15] Sulistyowati, A. (2023). The Existence of Sanggar Genessa in Caring for Kolintang Traditional Music. Grenek: Jurnal Seni Musik, 12(1), 37-43.